PRODUCED BY AN AUTODESK EDUCATIONAL PRODUCT

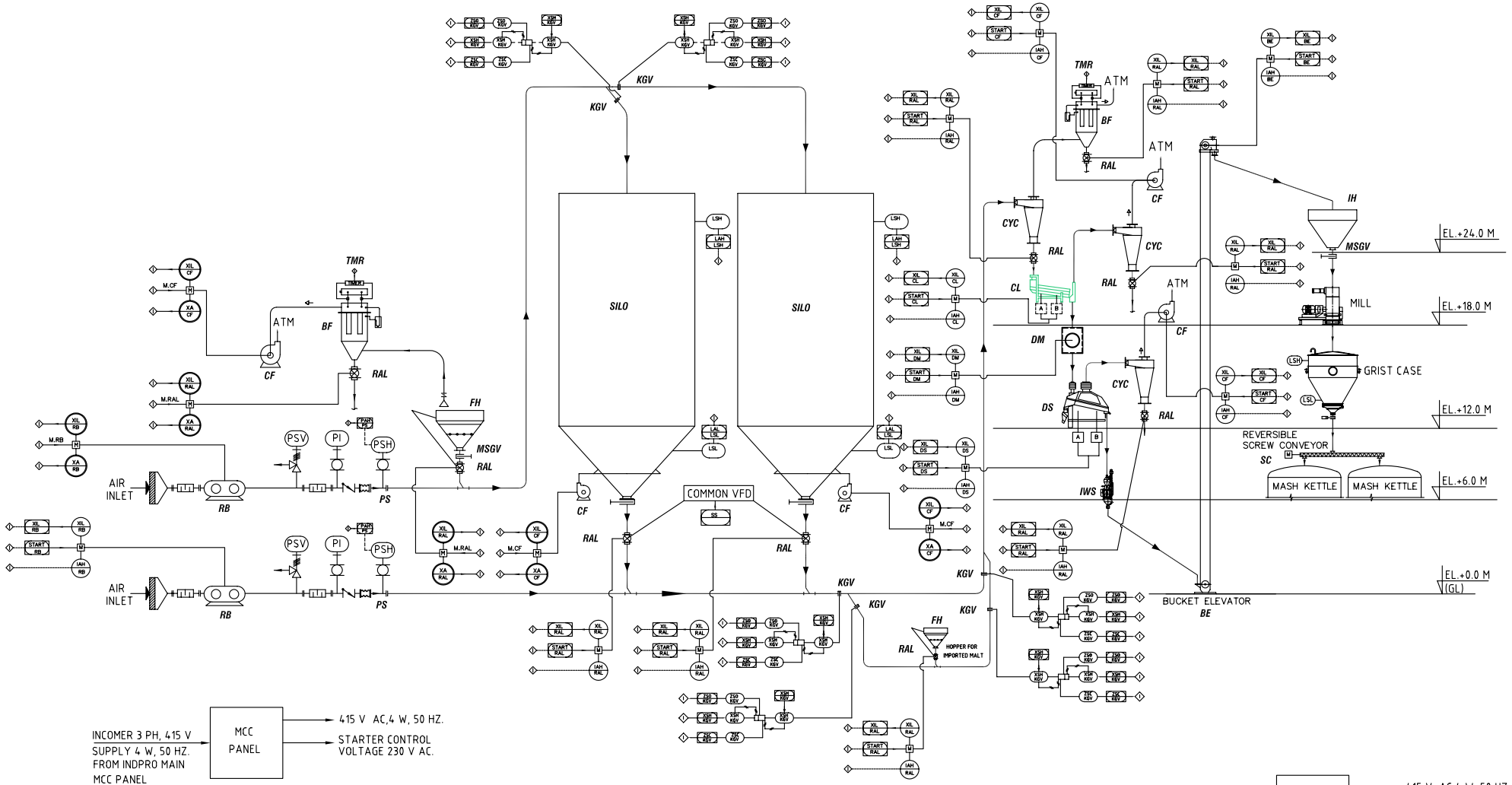

INCOMER 3 PH, 415 V SUPPLY 4 W, 50 HZ. FROM INDPRO MAIN MCC PANEL → MCC PANEL → 415 V AC,4 W, 50 HZ. / STARTER CONTROL VOLTAGE 230 V AC.

PANEL FOR SILO LOADING SYSTEM

INCOMER 3 PH, 415 V SUPPLY 4 W, 50 HZ. FROM CLIENT'S PANEL → MCC PANEL → 415 V AC,4 W, 50 HZ. / STARTER CONTROL VOLTAGE 230 V AC.

PANEL FOR SILO UNLOADING & CLEANING SYSTEM

Indpro OPTIMIZING SYSTEMS INTEGRATION

INDPRO ENGINEERING SYSTEMS PVT. LTD.

PRODUCED BY AN AUTODESK EDUCATIONAL PRODUCT
PRODUCED BY AN AUTODESK EDUCATIONAL PRODUCT
PRODUCED BY AN AUTODESK EDUCATIONAL PRODUCT